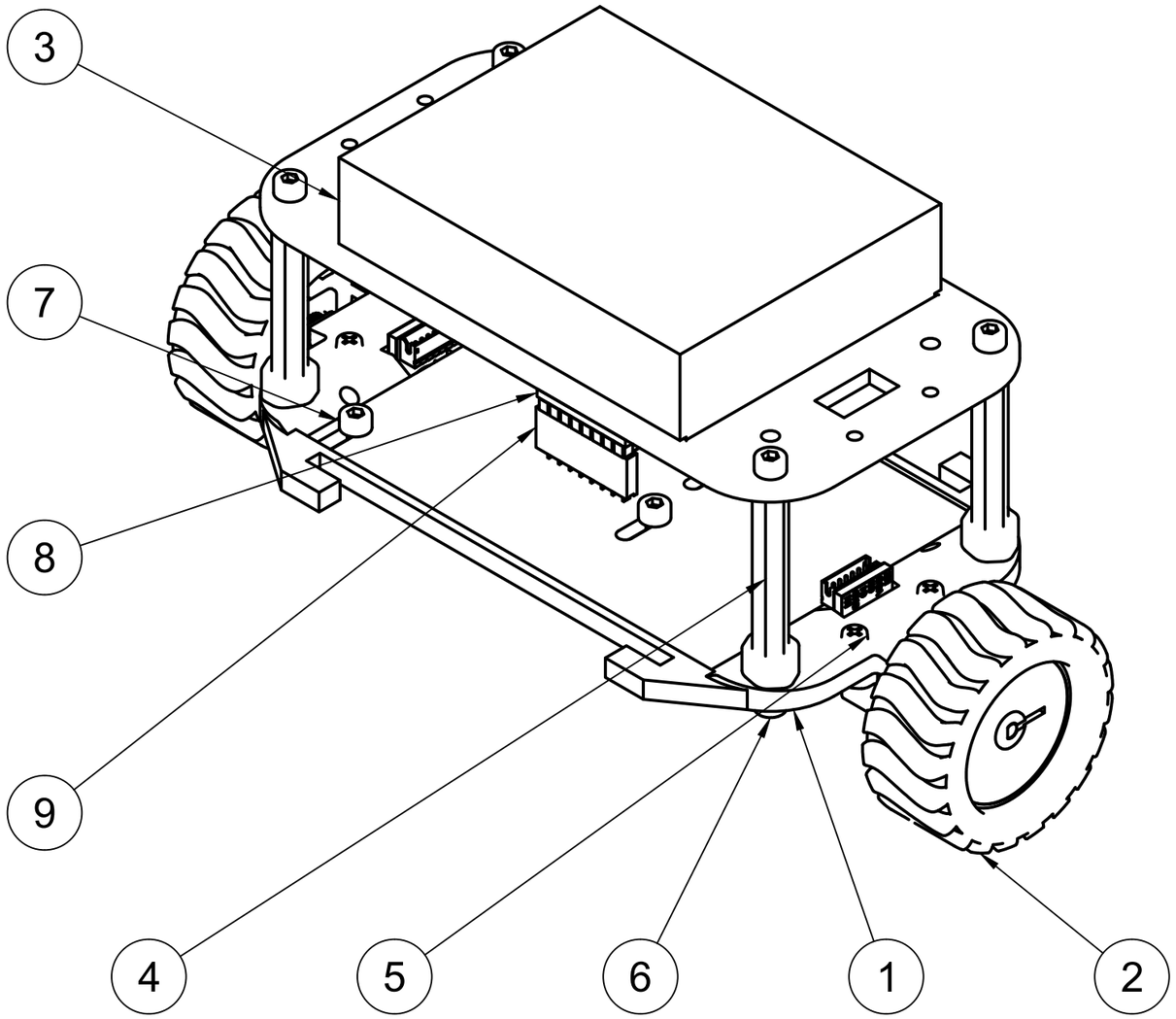

Parts List

Item	Qty	Part Number	Material
1	1	Segway1	Plastic
2	2	Wheel Assembly	----
3	1	3S_HOLDER	Acetal Resin, Black
4	4	----	Steel
5	4	ISO 7048 - H - M2.5 x 8 Steel 4.6 Plain	Steel 4.6, Plain
6	8	ISO 4762 - M3 x 6 Steel 4.6 Plain	Steel 4.6, Plain
7	6	ISO 4762 - M3 x 5 Steel 4.6 Plain	Steel 4.6, Plain
8	1	GY_521_MPU6050	Steel
9	1	2_54_x_8_pitch_connector_	Steel

Dept.	Technical reference	Created by Norbert Kania 06/04/2026	Approved by
		Document type	Document status
		Title SEGWAY_ASSEMBLY	DWG No.
			Rev. / Date of issue / Sheet 1/2

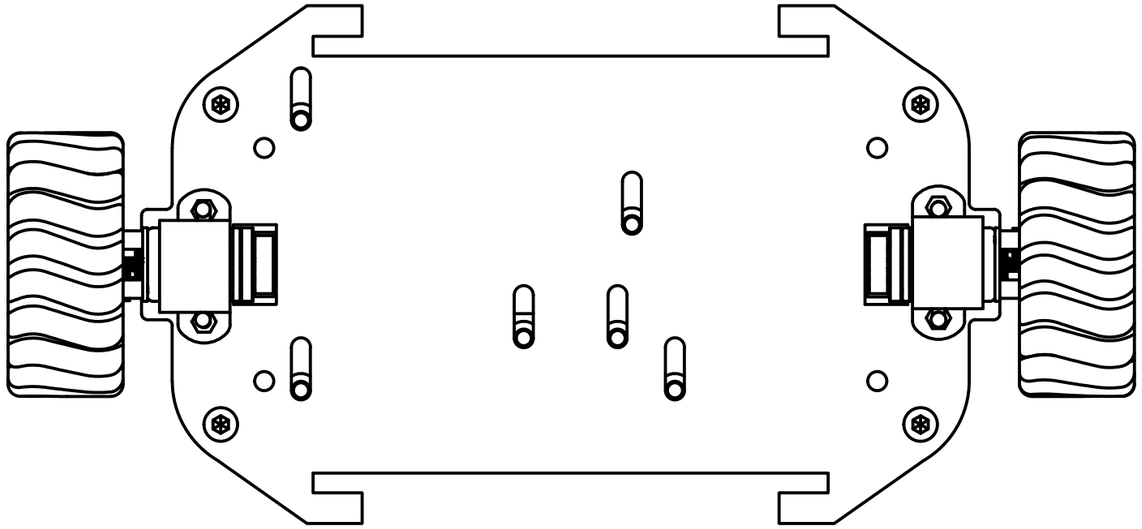

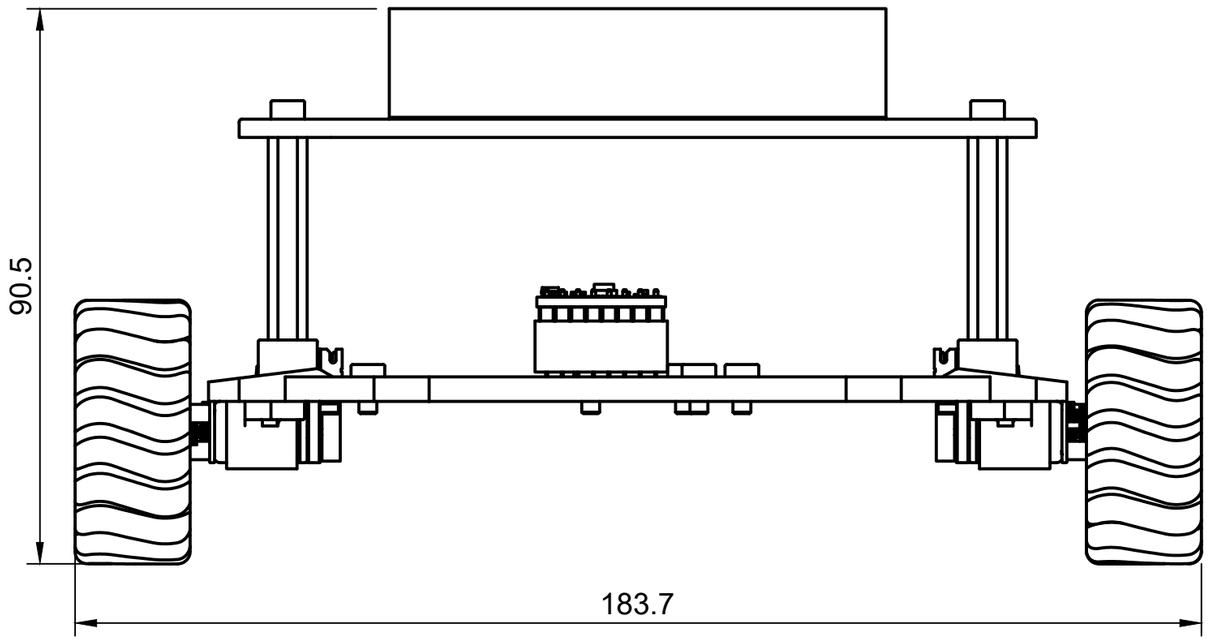

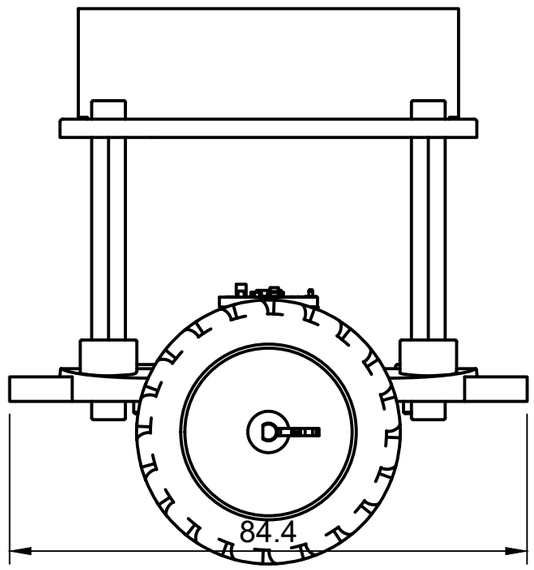

Dept.	Technical reference	Created by Norbert Kania 06/04/2026	Approved by
		Document type	Document status
		Title SEGWAY_ASSEMBLY	DWG No.
			Rev. / Date of issue / Sheet 2/2